Axial and mixed flow pumps (Service Providers)

One-day training

Session 1 – Introduction, training objectives and pre-training evaluation

Cereal Systems Initiative for South Asia

Funded by

USAID FROM THE AMERICAN PEOPLE

BILL & MELINDA GATES foundation

Partners

CIMMYT International Maize and Wheat Improvement Center

IFPRI

IRRI

What do you expect to learn from this training?

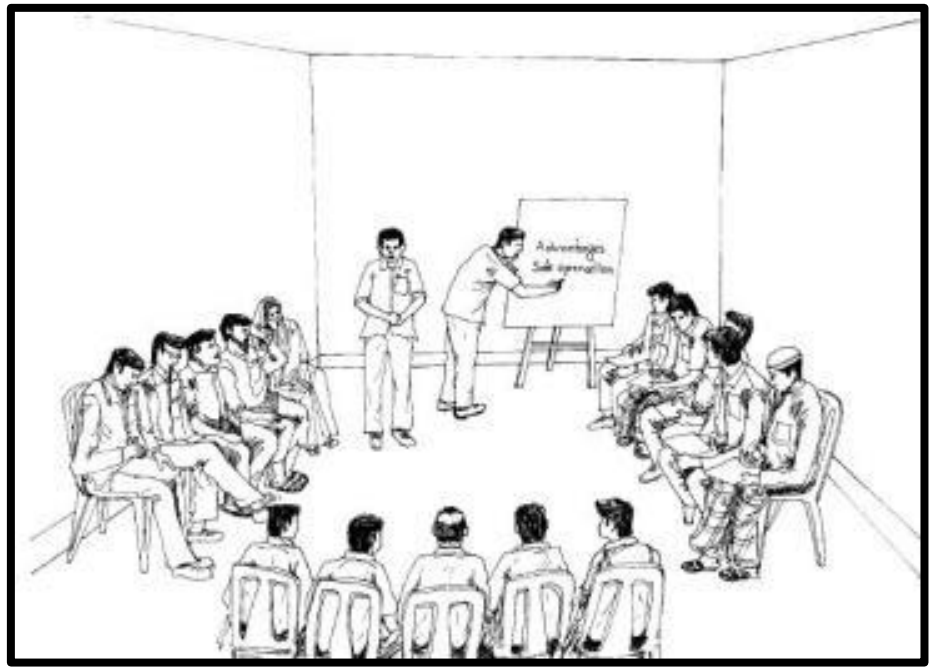

- In groups, discuss what you think you'll learn today.
- Choose one of the participants to speak for the group.
- Take Notes.

Today's sessions

1. Introduction, training objectives and pre-training evaluation
2. Introduction to the axial flow pump and mixed flow pump
3. Major parts of the axial and mixed flow pumps and their functions
4. How to set up and use an axial or mixed flow pump safely and effectively

Today's sessions

5. Troubleshooting and maintenance
6. Starting an axial or mixed flow pump service business
7. Review of key messages, post-training evaluation and close of training

What kind of training is this?

This is participatory training, so:

- **Ask questions and speak.**
- **Learn by experience – run irrigation pumps yourself and learn how to operate them.**
- **Learn by discussing each topic with your group.**

- **Speak up when the facilitator asks questions – and ask questions yourself. This way we can learn from each other.**
- **Feel free to ask questions and to contribute your knowledge!**

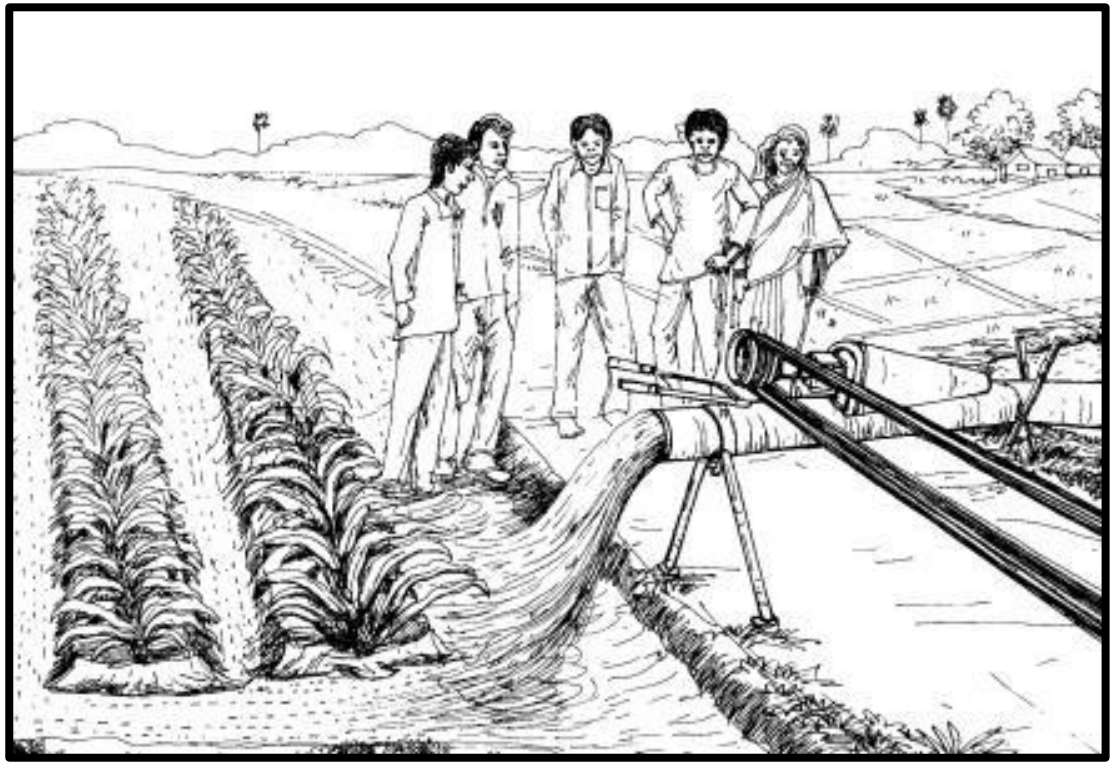

Please enjoy this training!

- **Make sure you get time to practice how to set up and operate the pump.**
- **Have fun!**

Axial and mixed flow pumps (Service Providers)

One-day training

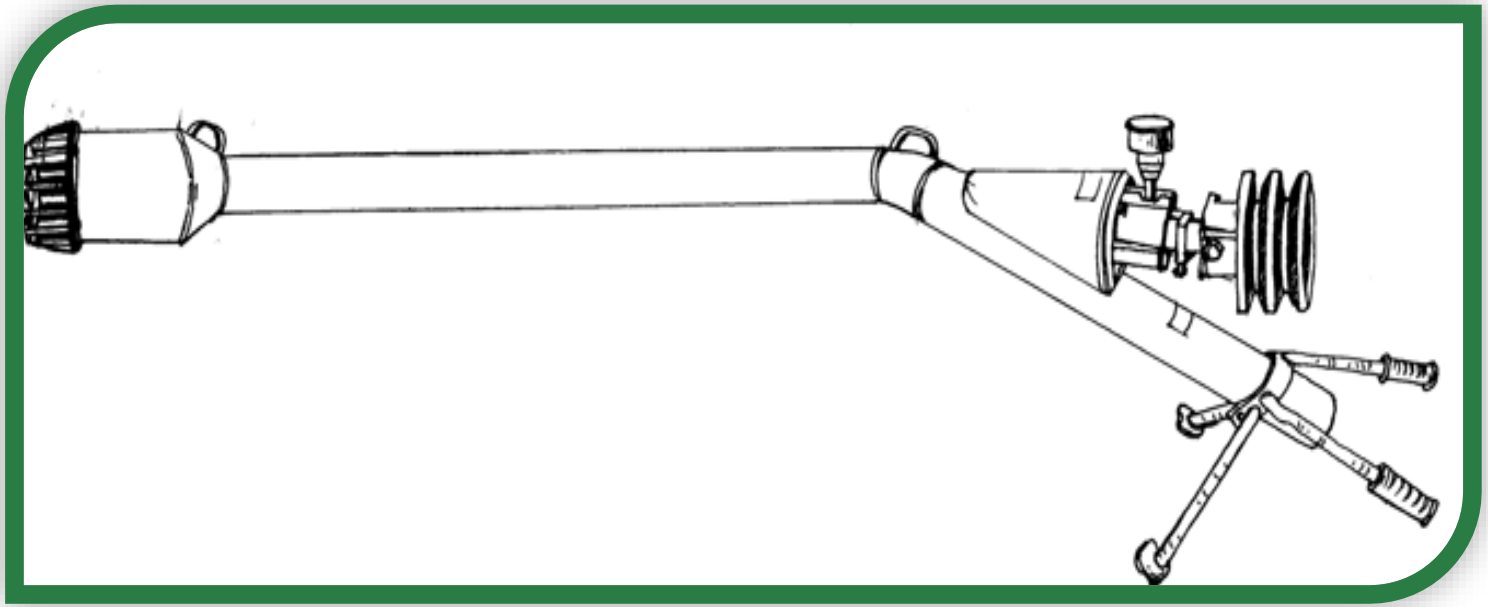

Session 2 – Introduction to the axial flow pump and mixed flow pump

Cereal Systems Initiative for South Asia

Funded by

USAID FROM THE AMERICAN PEOPLE

BILL & MELINDA GATES foundation

Partners

CIMMYT International Maize and Wheat Improvement Center

IFPRI

IRRI

What are the axial flow pump and mixed flow pump?

- An axial or mixed flow pump (AFP/MFP) is driven by

(1) a shaft encased in a long pipe, and

(2) an impeller (this is a reverse directed propeller – like on a boat – which operates using power from a diesel engine or electric motor)

- **The mixed flow pump impeller is usually larger than the pipe in which the shaft is encased, which provides extra power to lift water.**
- **AFPs can be traced back to Vietnam and Thailand in the 1960s, where they were developed by innovative farmers. They are now common throughout Southeast Asia.**

- **Both pumps are also known as ‘propeller pumps’ because the impeller works much like a boat propeller.**
- **To run an AFP, a two-wheeled tractor or a 12-16HP diesel engine is necessary (unless engines are directly coupled). However, these are rare in South Asia.**
- **Using a AFP to irrigate farmers’ fields can be profitable –for the pump owner and for the farmer too!**

Differences between the AFP/MFP and the centrifugal pump

Criteria	AFP/MFP	Centrifugal pump
Capacity	high	low
Frictional loss	low	high
Operating cost	low	high
Power transmission	high efficiency	low efficiency
Operating time required	less	more
Manufacture	easy to fabricate	difficult to fabricate
Fuel consumption	low	high
Water lifting height	up to about 3 m (and fuel efficient)	over 3 m (but with low fuel efficiency when lift < 3m)

Why did my neighbour get such high yield?

Because an AFP or MFP provided enough water at the right time, that's why I got higher yield!

Advantages of the AFP

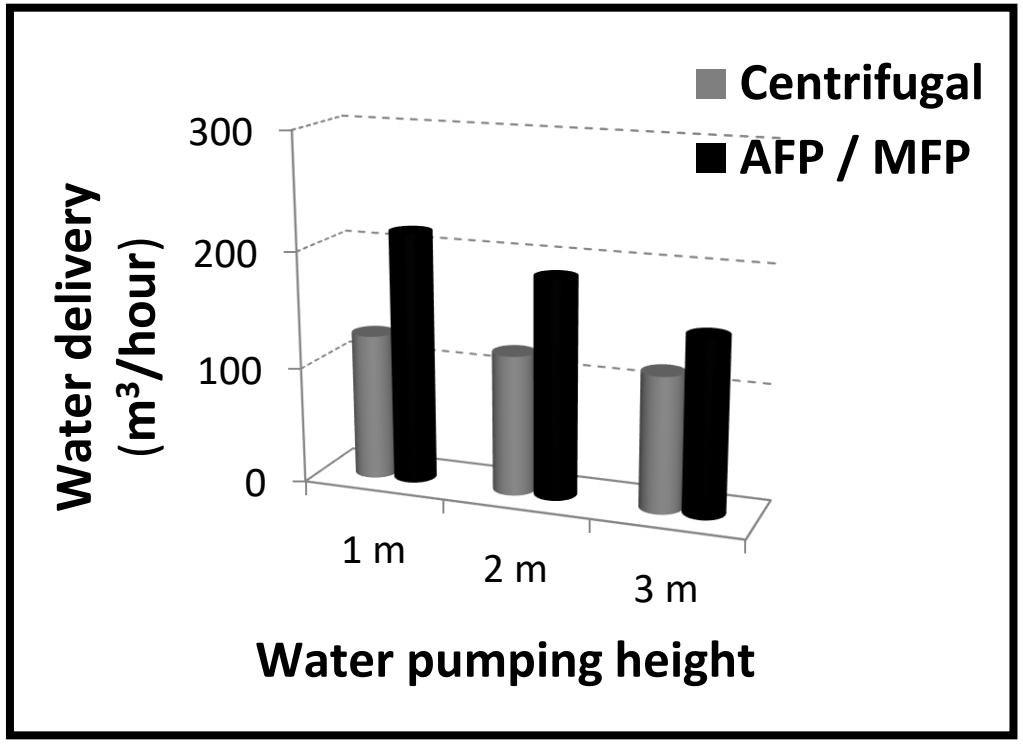

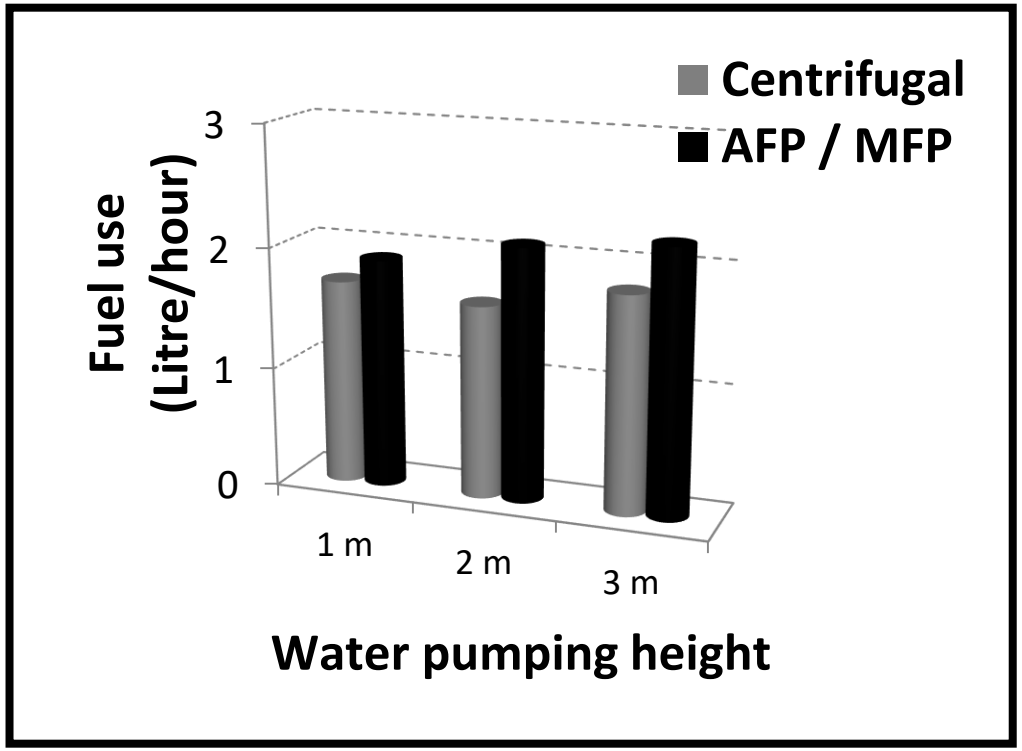

Advantages of the AFP

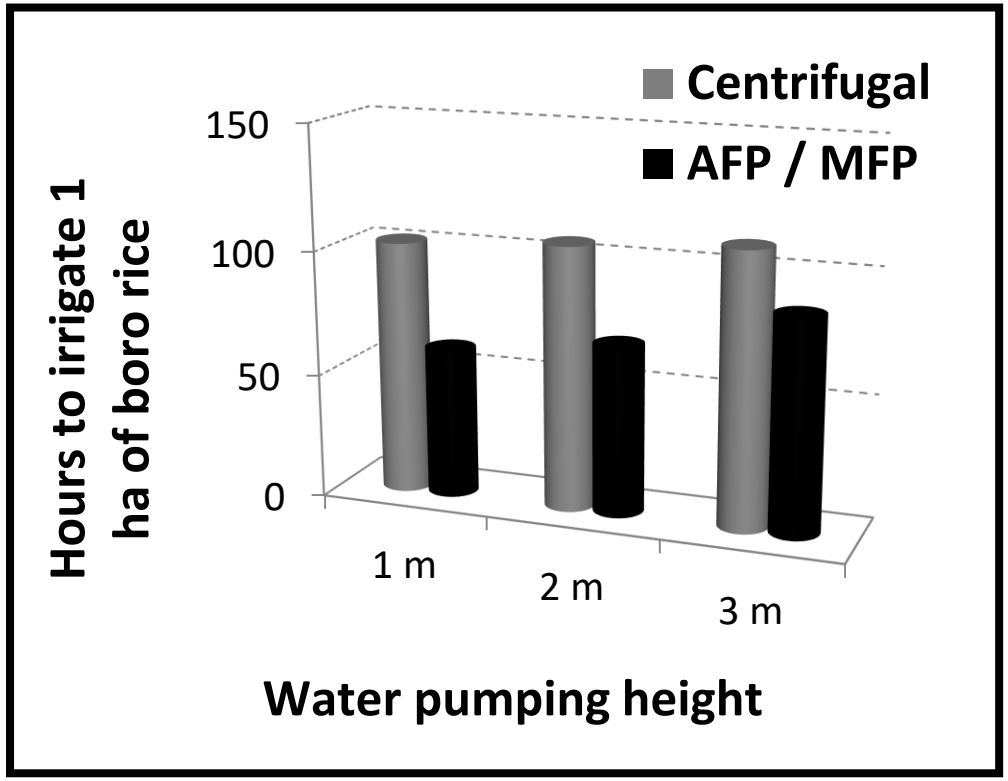

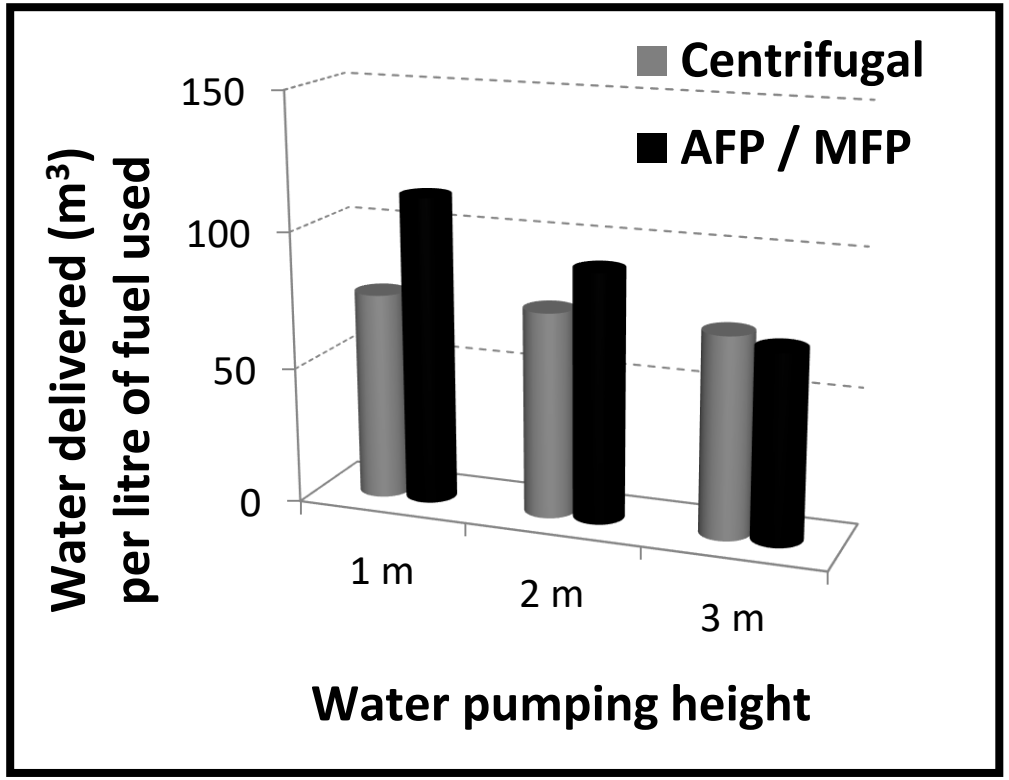

Early experiments show that:

- **At 1 m lift, the AFP is 51% more fuel efficient than the centrifugal pump.**
- **At 2 m lift, the AFP is 21% more fuel efficient than the centrifugal pump.**
- **At 3 m lift, the AFP discharges more water but the fuel cost is higher.**

Axial flow pumps can provide increased lift height.

Experiments are under way to determine the best engineering approach to developing highly fuel efficient MFPs.

Axial and mixed flow pumps (Service Providers)

One-day training

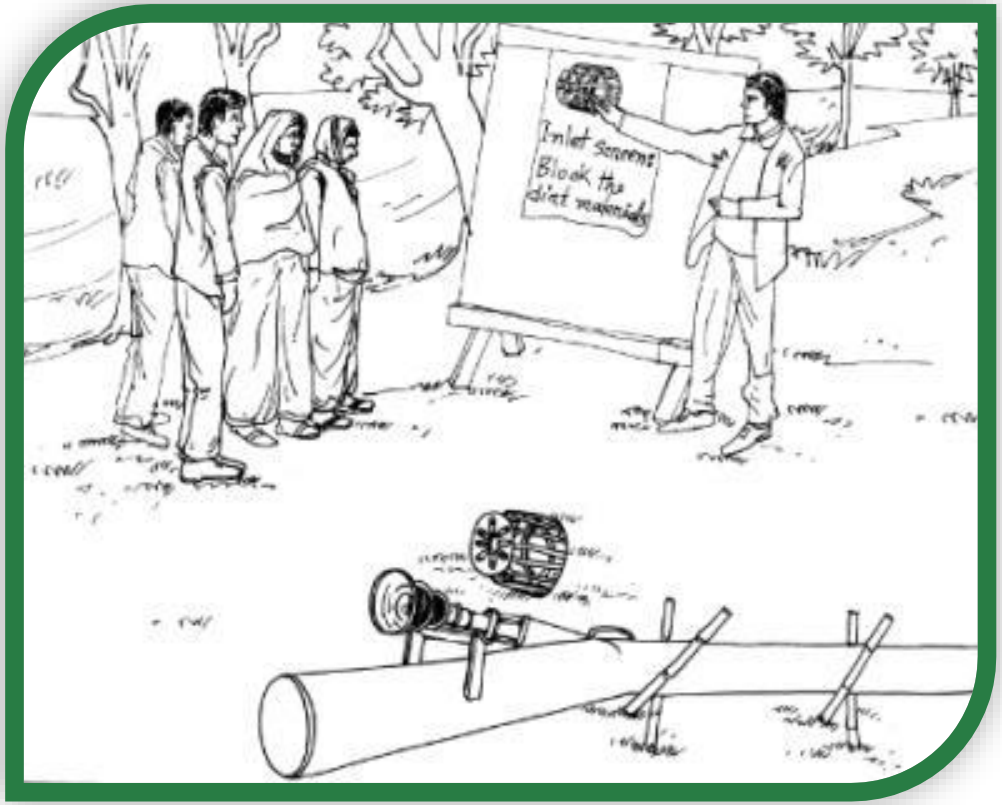

Session 3 – Major parts of the axial or mixed flow pump and their functions

Cereal Systems Initiative for South Asia

Funded by

USAID FROM THE AMERICAN PEOPLE

BILL & MELINDA GATES foundation

Partners

CIMMYT International Maize and Wheat Improvement Center

IFPRI

IRRI

Major parts of the axial flow pump and their functions

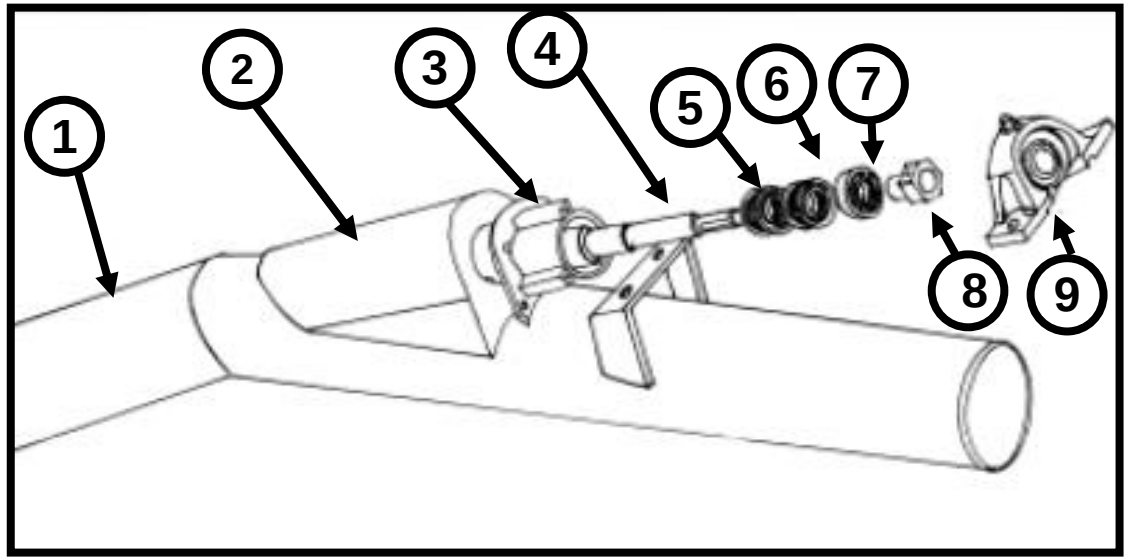

1. Pipe column
2. Bearing house mount
3. Bearing housing
4. Inlet side drive shaft
5. Thrust bearing
6. Ball bearing
7. Additional ball bearing
8. Shaft collar
9. Mounted bearing

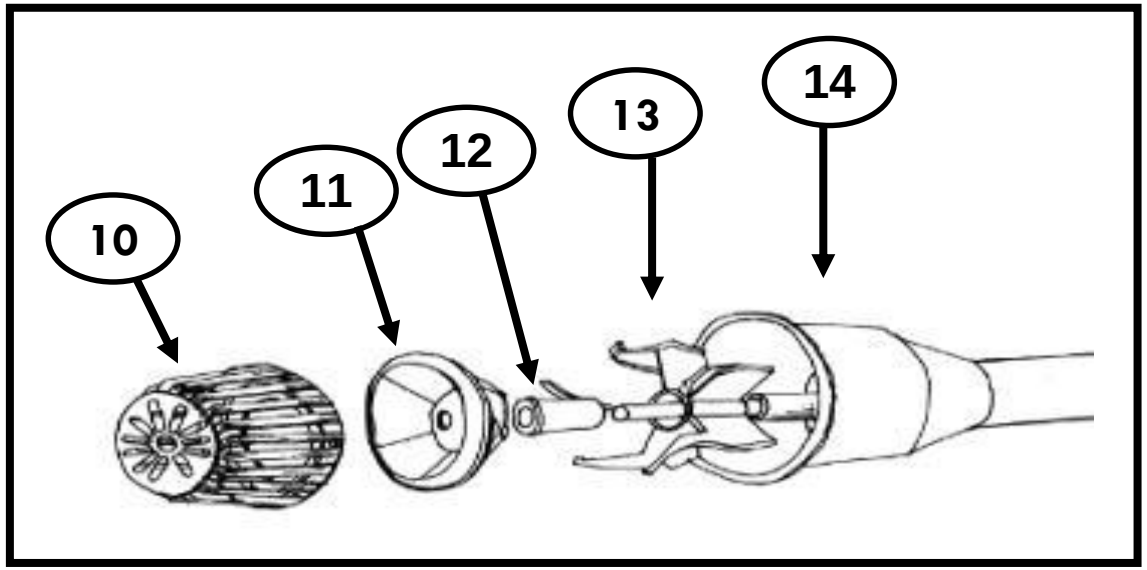

10. Inlet screen.

11. Impeller.

12. Suction end bushing.

13. Suction end stator.

14. Suction bell.

The inlet screen

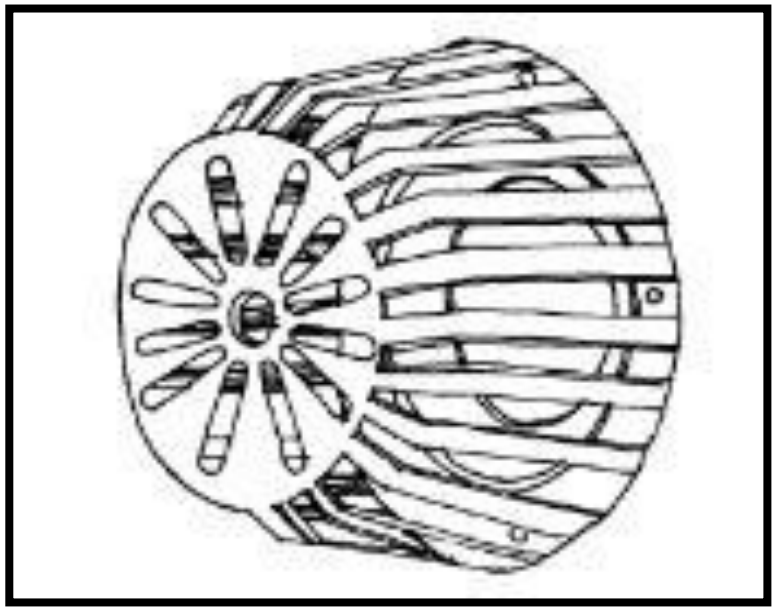

Prevents dirt and other stray materials from getting into the pump from the canal, pond or river that the water is pumped from.

The impeller

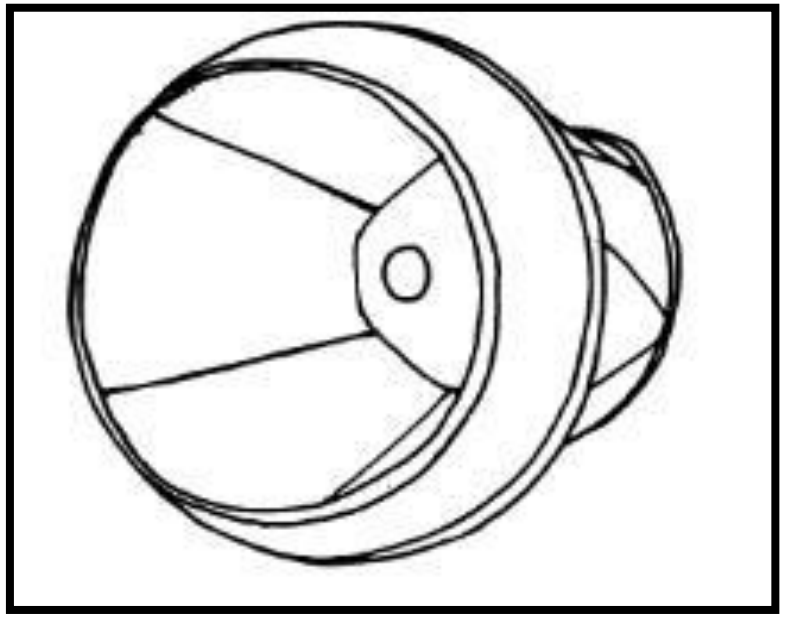

Pumps/pushes water upward through the pipe or conduit.

The suction end stator

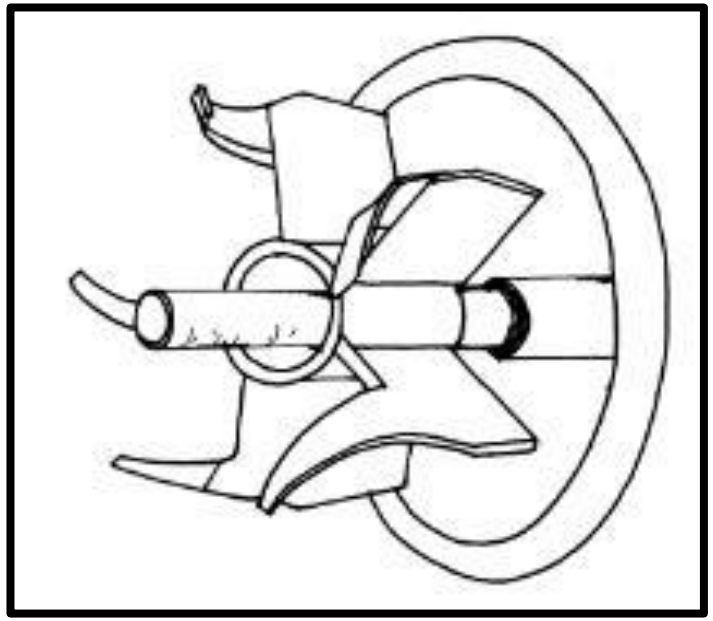

Straightens water flow and reduces turbulence.

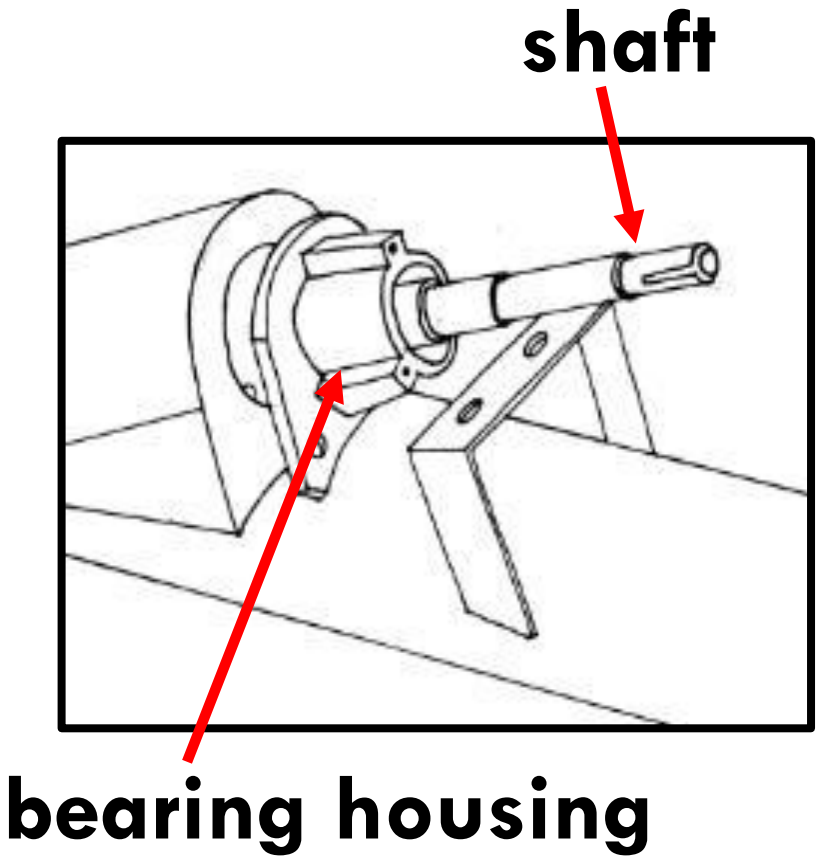

The driving shaft
Drives the impeller

The bearing housing
Holds the bearings

The pipe/conduit

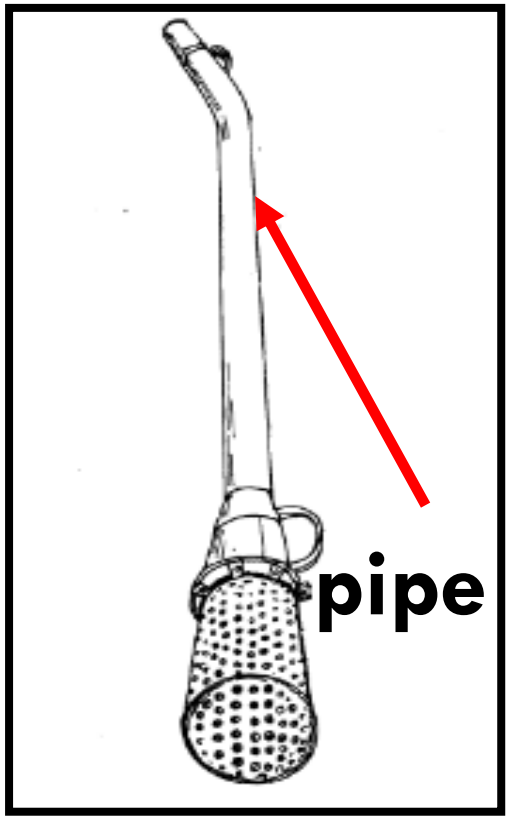

Transfers the water pumped by the impeller until delivery.

Note: this pump is an AFP (not MFP) because it does not have a 'bell' shape at the end of the pump from where water is drawn.

The bushing

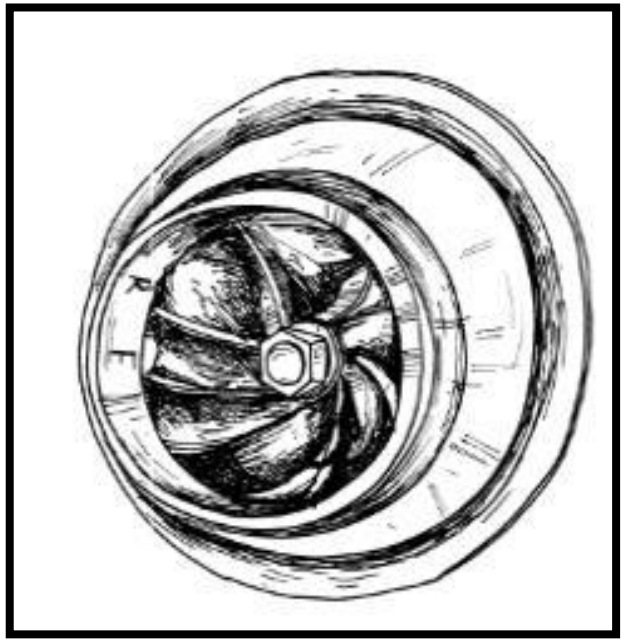

Holds the impeller and shaft in place

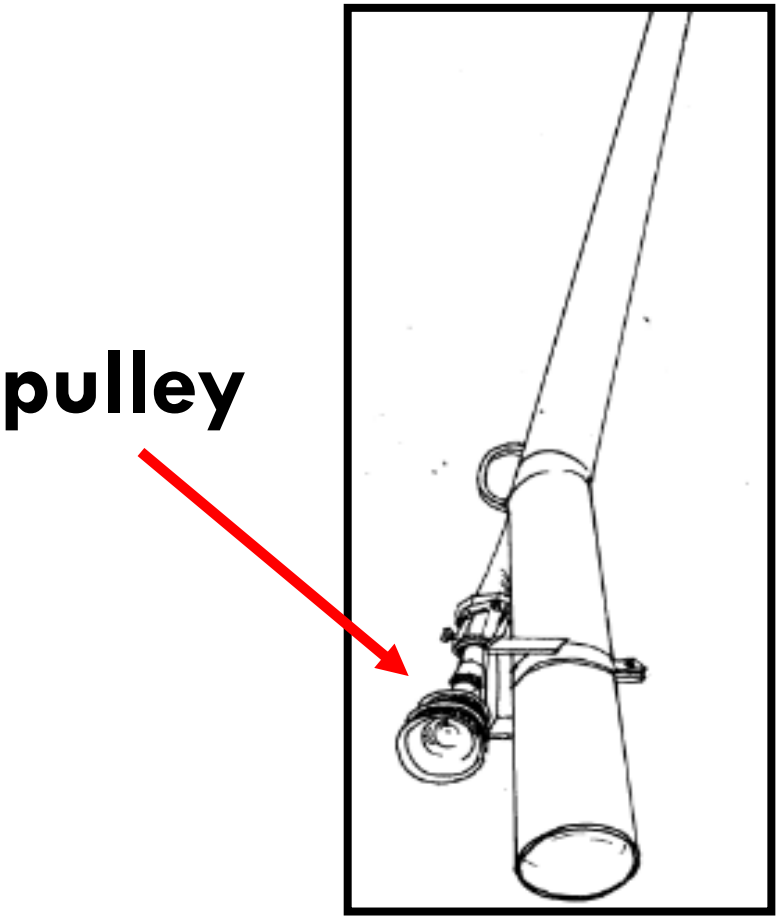

The pulley

Drives the shaft to rotate the impeller (powered by an engine)

The diffuser vane

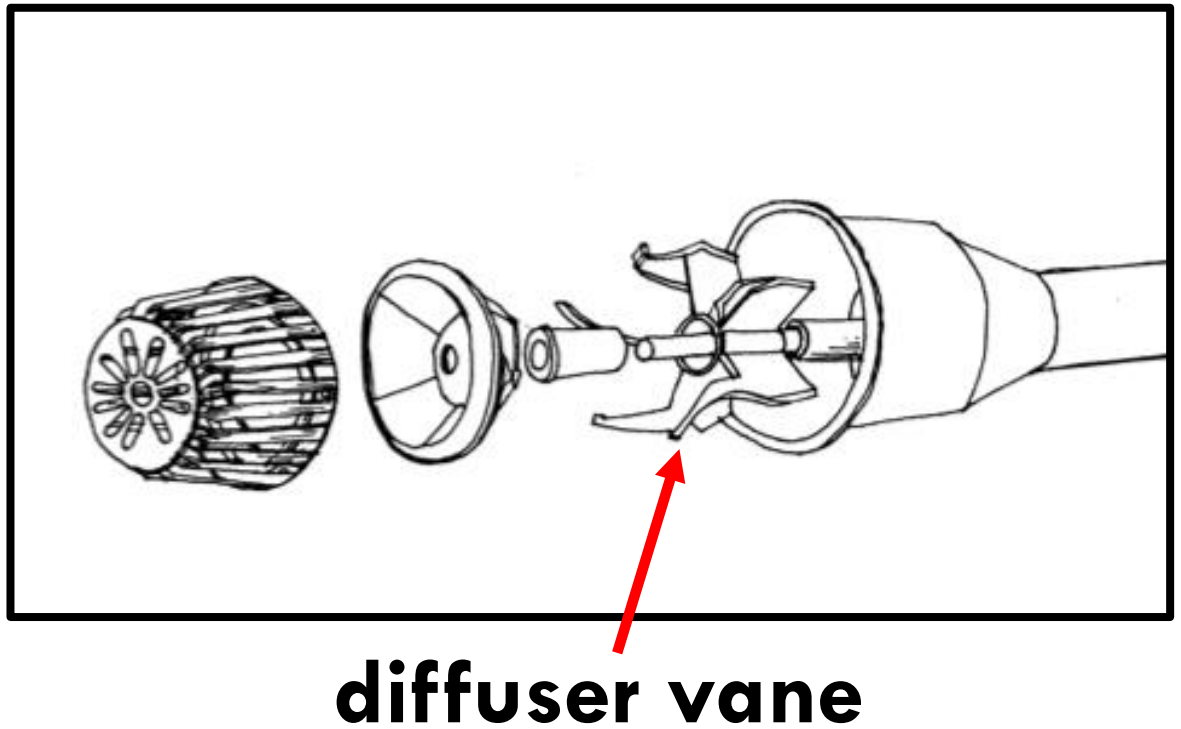

Straightens the water after it is transferred by the impeller into the conduit pipe

Key messages

- **The axial pump and the mixed flow pump are very similar.**
- **Axial flow pumps have smaller impellers – these fits inside the conduit pipe.**
- **Mixed flow pumps have larger impellers which are wider than the conduit pipe. They deliver more water than axial flow pumps.**

The major parts of both pumps are:

Name of part	Functions
Inlet screen	Stops dirt and other stray materials from getting into the pump from the canal, pond or river from where the water is pumped
Impeller	Pumps/pushes water upward through the pipe or conduit
Driving shaft	Drives the impeller, which pushes water up the pump
Pipe or conduit	Holds the water pumped by the impeller until delivery
Bearing housing	Hold the bearings
Bushing	Works like a bearing and holds the shaft in place
Pulley	Drives the shaft (powered by an engine)
Diffuser vane	Straighten the water flow and reduces turbulence

Axial and mixed flow pumps (Service Providers)

One-day training

Session 4 – How to use an axial or mixed flow pump safely and effectively

Cereal Systems Initiative for South Asia

Funded by

USAID FROM THE AMERICAN PEOPLE

BILL & MELINDA GATES foundation

Partners

CIMMYT International Maize and Wheat Improvement Center

IFPRI

IRRI

Setting up an AFP/MFP: site selection

When deciding where to set up the pump, it is essential to consider the following:

1. **Quality of the water**

   Clearer and cleaner water extends the life of the pump: water containing sand or mud causes pump deterioration over time.

2. Lift height

The selected site should have a lift height of less than 3m, in order to improve fuel efficiency. Excess lift leads to wasted fuel (although water pumping rates may still be higher than when using a centrifugal pump).

3. **A safe place to put the engine or two-wheeled tractor (if used to power the pump). This should be:**
   - **on level and stable ground**
   - **with sufficient distance between the engine and the AFP to allow belt coupling**

4. **Appropriate water depth**
   - **with enough water to keep the axial flow pump from running dry**
   - **in some coastal areas, where there is still freshwater in canals, pump during high tide**
   - **the water must be deep enough to allow an additional 0.6 m between the axial flow pump and the bottom of the river, canal or pond.**

5. **Distance of the pump from where the water needs to be**
   - **A flexible hosepipe is a cheap and easy way to reach longer distances when moving water from the canal to the farmers' fields.**

Setting up an axial flow pump

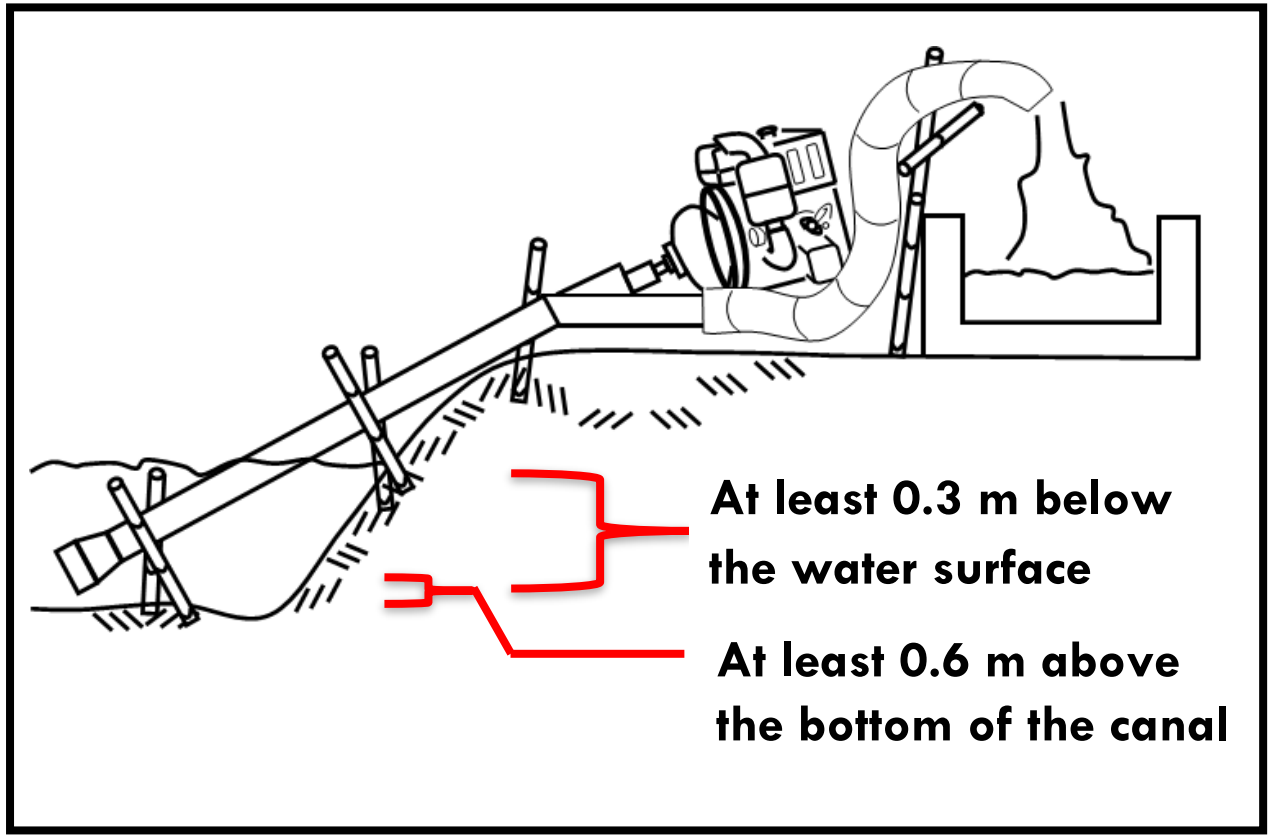

The outlet of the pump should be parallel to the ground. The inlet needs to be at least 0.3m below the water surface and at least 0.6 m above the bottom of the river, pond or canal.

Safe operation is essential!

- **The AFP/MFP can be a dangerous machine – it is important to stay safe when using it.**
- **Wear tight clothing when operating one of these pumps. Loose clothing can become tangled in the moving parts of the machine, causing injury or even death.**

Never wear loose fitting clothing around agricultural machinery!
Never work without shoes!

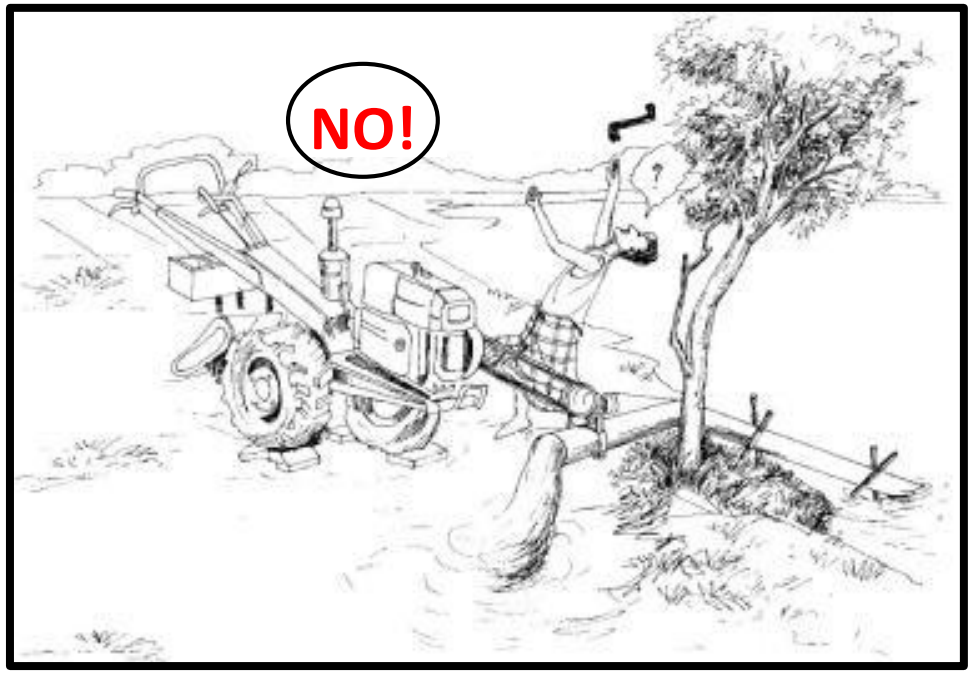

Unsafe operation

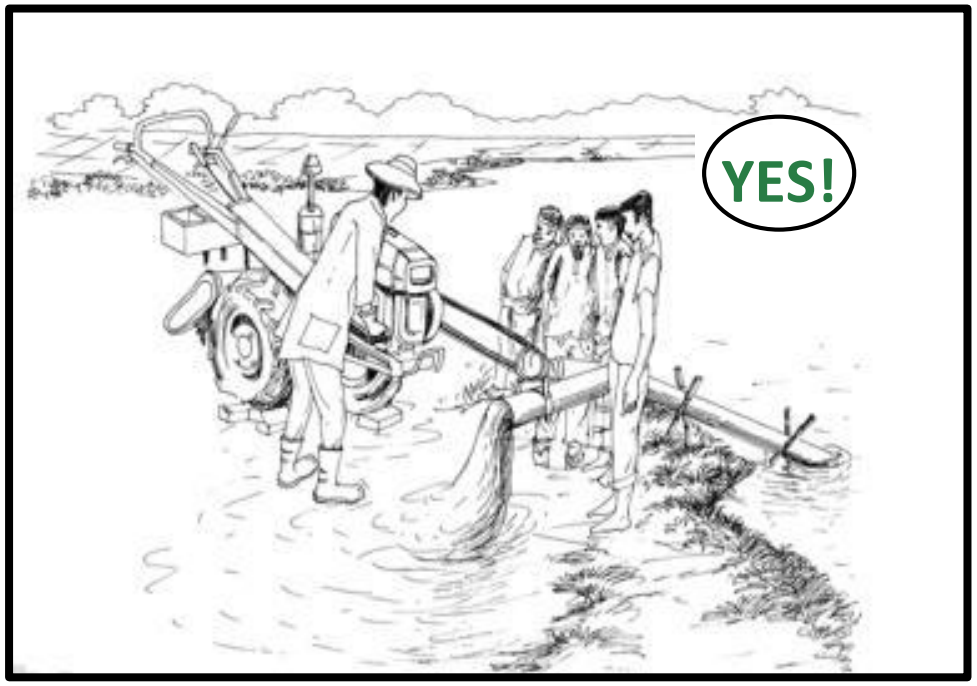

Safe Operation

NEVER use the PTOS around children: they can easily be hurt by it

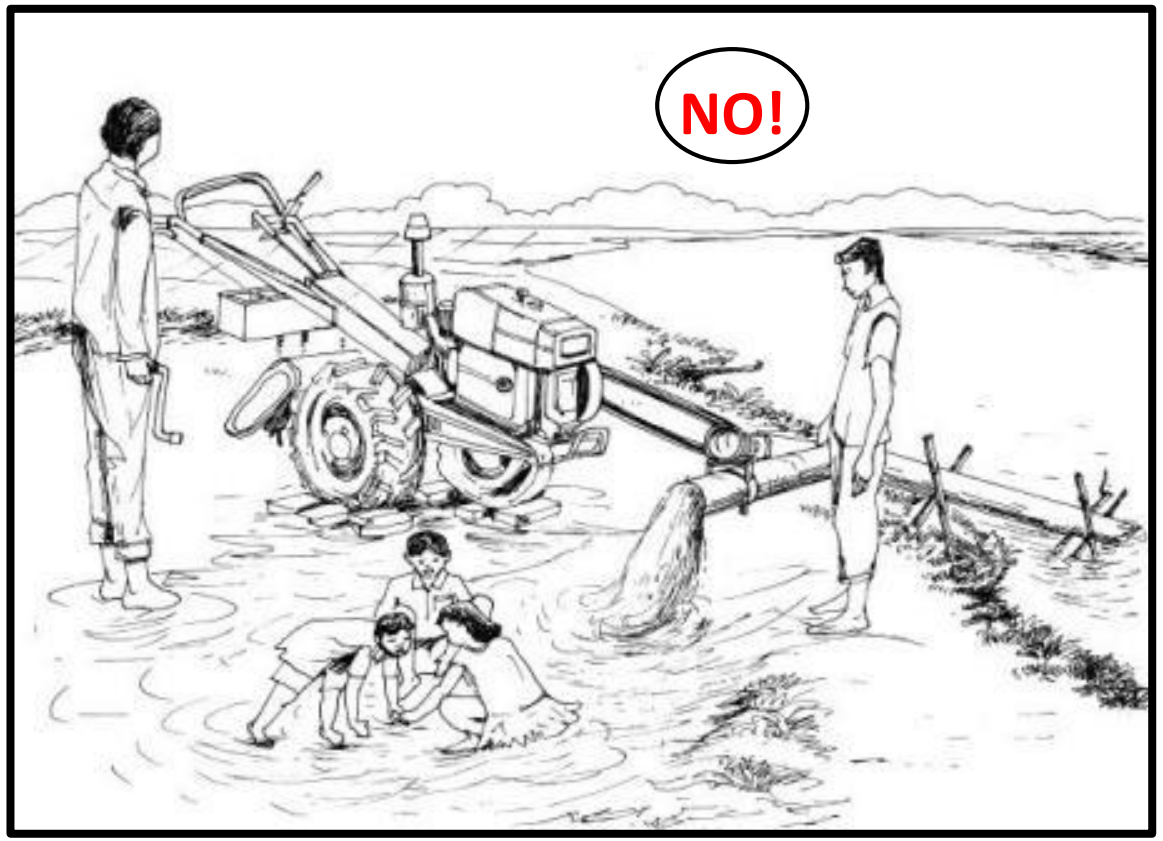

NEVER use the axial or mixed flow around children – they can easily be hurt by the machine.

Safe operation of the axial and mixed flow pump: essential points to consider

- Check that important parts (e.g. bolts, nuts, clamp) are tight.
- Check for any holes in the body and repair.
- Check the bearings and bushings are greased.
- Clean the strainer of the pump of any foreign materials.

- Check oil and fuel levels in the engine.
- Check the belts for any cracks or damage.
- Check the tightness of the pulley.
- Set up the belts.
- Make sure both belts are correctly aligned to ensure they do not twist when the pump is in use. To do this, you may need to elevate one side of the engine to obtain correct parallel alignment.

- **Make sure the pump is not touching the bottom of the canal, pond or river, and that it is not above the surface of the water.**
- **Check both the engine and the pump are securely attached to the ground so they do not move when in use.**
- **Select the correct rpm of the engine and pump.**
- **Check the delivery hose is properly attached.**

Review of key messages

- **The AFPs currently available in South Asia should be used only with non-saline water. For saline water, plastic or stainless steel bodies are needed, which are available in South East Asia, but not yet in South Asia.**

- **Saline water corrodes and destroys most metal AFPs/MFPs. In the future, pumps suitable for saline water will become available.**
- **To achieve high fuel efficiency, the selected canal or river should not have water lifts of much more than 3 m in height.**

- **Tests of prototype AFP/MFPs at the Bangladesh Agricultural Research Institute showed that at a 1 m lift, AFP is 51% more fuel efficient (water delivered to fuel used ratio) than centrifugal pumps.**

At a 2 m lift, it is 21%. At 3 m, the AFP continues to lift more water, but it uses more fuel than a centrifugal pump. This means that although a lift height of above 3 m delivers more water, it may not be as profitable because more fuel may be needed.

- **Use bamboo sticks placed into banks of the river, canal or pond to provide support to the pump body and the end which houses the impeller. The impeller should never touch the bottom of the pond, canal or river that the pump is being used in.**

- **Set up the impeller end of the pump at least 0.60 m above from bottom of the water source (river, pond or canal) and 0.30 m below the water surface. This will avoid creating a whirlpool in the water that will reduce pump efficiency.**

- **Make sure the pulley and engine are correctly aligned (i.e. in a straight line)**
- **Wear tight clothing while operating an axial/mixed flow pump (do not wear loose clothing, as it can become stuck in the pump and can injure users).**

- **Check important parts/points: nuts, bolts, clamps, holes in the body, greasing points (bearings and bushings), cracks/damage in the belt, oil-fuel in the engine, and tightness of the pulley, before starting the pump.**
- **Keep hands away from all rotating parts, such as the engine, impeller, belt and pulley.**
- **Keep children away from the pump when it is in use.**

Axial and mixed flow pumps (Service Providers)

One-day training

Session 5 – Troubleshooting and maintenance

Cereal Systems Initiative for South Asia

Funded by

USAID FROM THE AMERICAN PEOPLE

BILL & MELINDA GATES foundation

Partners

CIMMYT International Maize and Wheat Improvement Center

IFPRI

IRRI

Problem 1: the pump shaft breaks

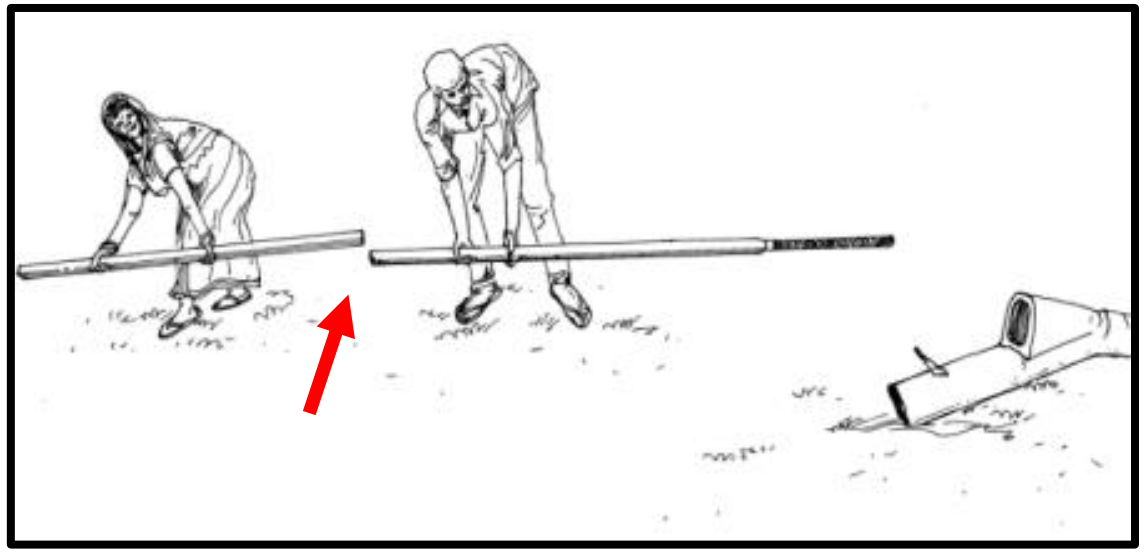

Symptoms:

Abnormal sounds from the pump or no water discharge

Causes:

(1) over-running the pump

(2) excessively high water lift height

(3) faulty shaft

Effects:

Complete pump failure (AFP/MFP cannot be used)

Solution:

(1) straighten the shaft, or

(2) weld the broken shaft, or

(3) if necessary, replace

Spare parts required:

Shaft

Where to get or make/repair spare parts:

collect new one from a dealer or make another one with a new pipe

Tools required:

dual wrench, adjustable wrench, screwdriver, hammer and puller

Problem 2: water leakage during pumping due to faulty oil seal

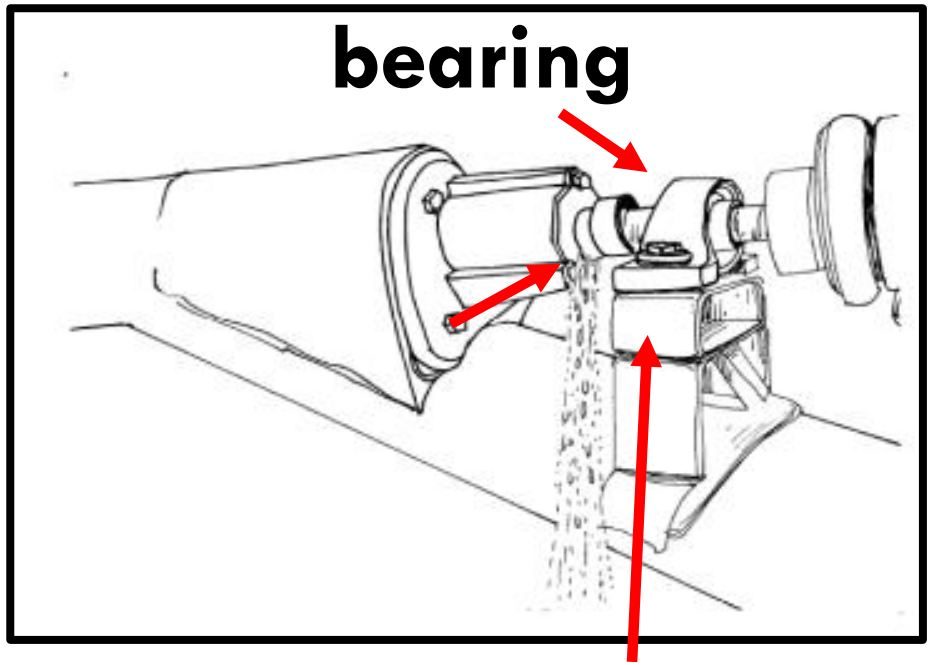

Symptoms:

Water leakage from the base of oil seal

Cause(s):

(1) tearing or loosening of the oil seal

(2) loosening of nuts and bolts

(3) bent shaft

Effects:

(1) water gets into the bearing and causes bearing damage

(2) reduction of water discharge/efficiency

(3) increased fuel cost

Solution:

(1) straighten the shaft

(2) replace oil seal

(3) tighten nut-bolts

(4) replace bearing support

(5) replace faulty bearings

Spare parts required:

oil seal, bearings

Where to get spare parts:

A shop dealing in pump/engine spare parts

Tools required:

dual wrench, adjustable wrench, screwdriver

Problem 3: the transmission V-belt rips

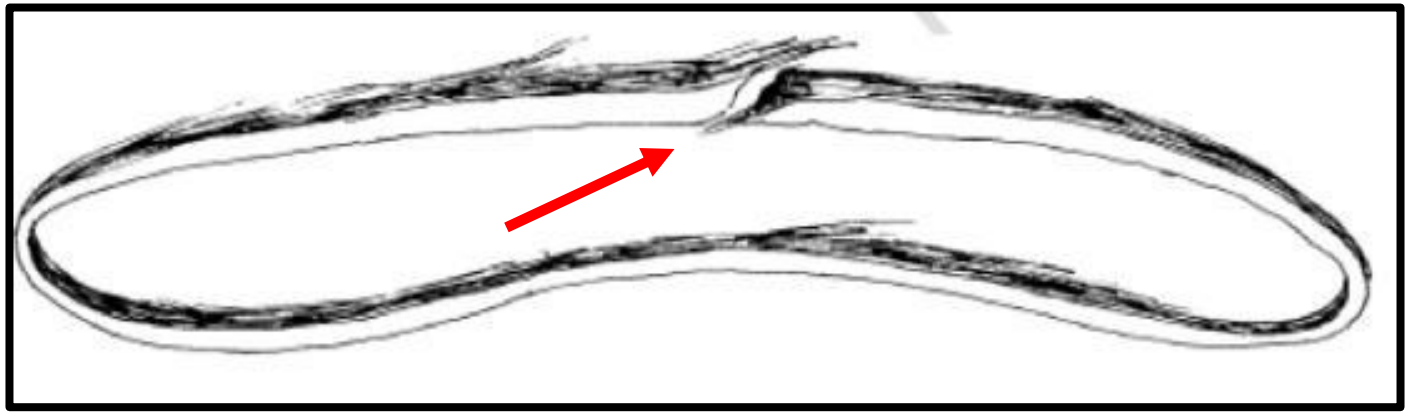

Symptoms:

The v-belt connecting the engine to the pump cracks or tears

Causes:

(1) **misalignment of the engine and pump and pulleys**

(2) **engine speed too high**

(3) **the pump pulley is too close to the engine**

(4) **rough surface of the pulley**

(5) **old belts**

Effects:

(1) belt slippage

(2) reduction of discharge

(3) increase of cost

(4) pump failure

Solution:

(1) align the pulley correctly in a straight line with the pump

(2) replace belt (full set)

(3) use large belt if water level is too low

(4) file the pulley until smooth

Spare parts required:

V-belt

Tools required:

File or sand/glass paper

Where to get spare part:

A shop dealing in pump/engine spare parts

Problem 4: The pump impeller breaks

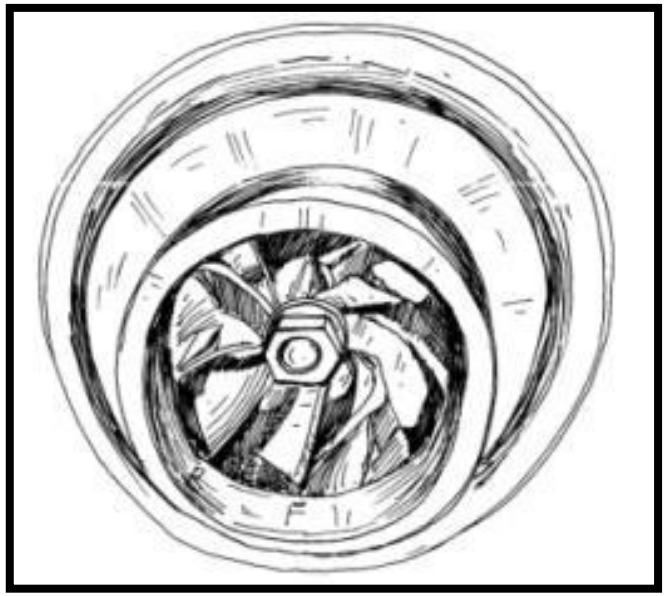

Symptoms:

Low discharge of water, abnormal vibration of the pump, lack of water flow

Cause:

Foreign objects or dirt are sucked into the pump, breaking the blades or causing their disruption

Effects:

(1) reduced discharge due to partial break of blade(s)

(2) zero discharge due to complete break of blade(s)

Solution:

(1) repair the blade(s), and/or

(2) replace the impeller

Spare parts required:

Impeller

Where to get or make/repair spare parts:

purchase new impeller from dealer or repair/have new blade(s) prepared at a local workshop

Tools required:

dual wrench and adjustable wrench

Problem 5: the pump pulley wears out

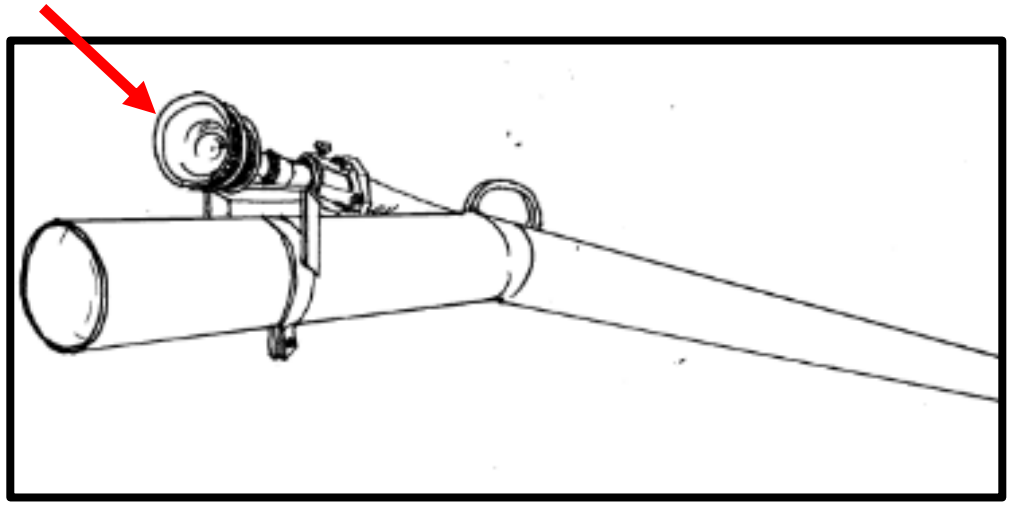

Symptoms:

Can be felt by touching the pulley – it will be out of shape, or show gouges.

Causes:

(1) loose V-belt

(2) rough surface of pump pulley

Effects:

The V-belt tears

Solution:

Replace the V-belt, or (if the pulley has deteriorated severely) replace the pulley

Spare parts required:

A new V-belt, or new pulley

Where to get spare parts:

At a shop dealing in pump/engine spare parts

Tools required:

A file, sandpaper or glass paper, wrenches

Problem 6: damage to shaft bushing due to deposition of sand in the pump

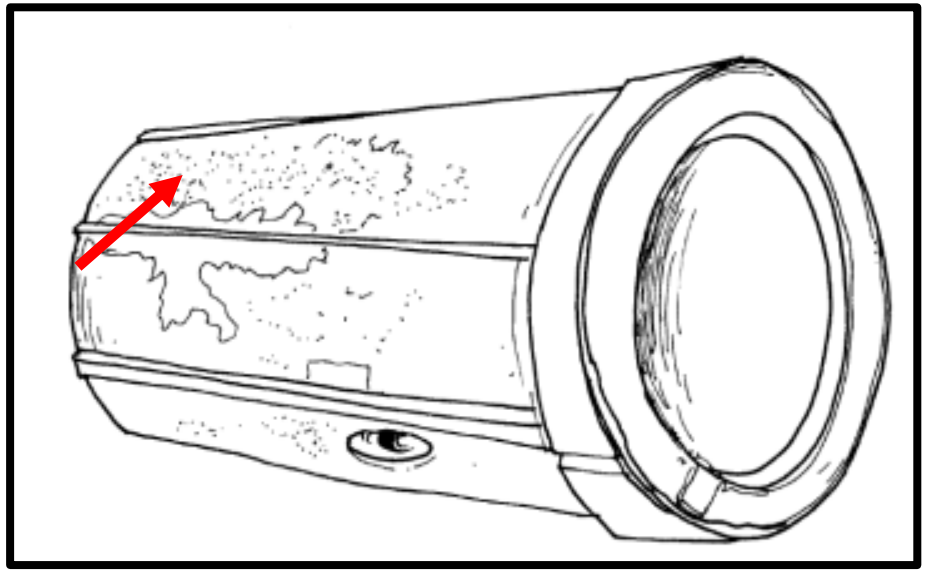

Symptoms:

Excessive vibration of the pump, faulty shaft

Causes:

(1) the impeller is very close (less than 0.6 m) to the bottom of the canal, pond or river

(2) the pump is running in muddy or sandy water

Effects:

the shaft bends and/or breaks, the bushing rips

Solution:

(1) Make sure the impeller is at least 0.2 m (or never less than 0.3 m) above the bottom of the water body being pumped

(2) do not run the pump in muddy or sandy water

Spare parts required:

Bushing

Where to get or make/repair spare parts:

Purchase new bushing from a dealer or have it repaired/a new one made from local workshop

Tools required:

dual wrench, adjustable wrench

Problem 7: shaft bearing(s) fail

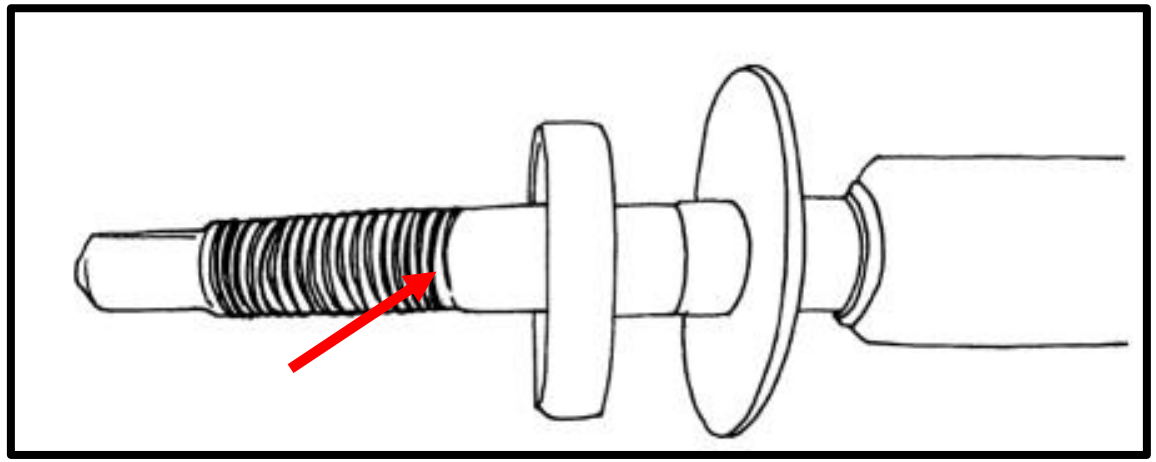

Symptoms:

Noise, overheating bearing (s)

Causes:

(1) misalignment of the shaft

(2) old bearing (s)

Effects:

(1) power loss

(2) reduction in discharge

Solution:

Replace faulty bearing (s)

Spare parts required:

Bearing(s)

Where to get spare parts:

shop dealing with pump/engine spare parts

Tools required:

dual wrench, adjustable wrench, screw driver, hammer, puller and chisel

Problem 8: too much black smoke in the exhaust

Symptom:

black smoke comes from the engine during operation

Causes:

(1) **engine speed is too high**

(2) **water lift height is too high**

(3) **engine size/horse power is too small for the AFP/MFP being used**

(4) **engine is old or overloaded**

Effect:

damage can be caused to the engine

Solution:

(1) reduce engine speed

(2) select correct engine or pump

(3) pump water within the suggested range of water lift heights

Maintenance and storage of the AFP/MFP

Every day:

- **Before starting the machine, move the shaft by hand to see bearing and bushing are in good and working condition.**
- **Open inlet cover and check by pulling or pushing the impeller one side and another to get sure no excess movement between shaft and bushing.**

- **If there is excess movement between shaft and bushing, replace them.**
- **Do not run the pump without water. Other than grease, water also helps to keep impeller and central bushing system cool.**
- **Cover the pump inlet with a fishing net so that floating dirt materials are unable to get into the pump inlet.**

- **Apply grease to each greasing point.**
- **Check whether grease pot and grease nipple on the impeller, shaft bushing at middle and pulley bearing are in good condition as they often damage during transportation.**
- **Check the inlet screen daily or at one hour interval and clean.**

- **To ensure maximum capacity of the pump, check for any crack or damage on the screen and impeller whenever stop the machine.**

Long-term storage:

- **The pump should be kept carefully so that it does not rust by touching the ground**
- **It is better to keep the pump above the roof or hanging with roof beam**

- **Open ends of the pump should be kept covered such that children cannot keep hard materials inside the pump**

Axial and mixed flow pumps (Service Providers)

One-day training

Session 6 – Starting an AFP/MFP service business

Cereal Systems Initiative for South Asia

Funded by

USAID FROM THE AMERICAN PEOPLE

BILL & MELINDA GATES foundation

Partners

CIMMYT International Maize and Wheat Improvement Center

IFPRI

IRRI

What do we mean by 'business'?

Most farmers who buy an axial or mixed flow pump use it to provide irrigation or pumped water to other farmers growing crops or managing fish and shrimp ponds.

A business is the activity of making, buying or selling goods or providing a service in exchange for money or other goods and services. Any activity or occupation run by an individual or group to obtain a profit and satisfy customer needs is a business – this includes businesses run by farmers!

Common types of business include:

- **Manufacturing**
- **trading**
- **running a store – like selling agricultural inputs to farmers**
- **farming**
- **providing agricultural machinery services to farmers**

What is a business plan?

A business plan is a marketing and sales strategy, which includes possible profits and losses. It helps the person running the business predict whether it is going to be a success, and helps them plan for the busy and not-so-busy times of year.

An AFP/MFP business plan should consider the following questions:

- **Where there is a market for AFP/MFP services: where will farmers pay for irrigation with an AFP/MFP?**
- **What crops or enterprises – for example aquaculture where farmers grow fish or shrimp – are best suited for an AFP/MFP?**

- **What is the demand for an AFP/MFP service in my area? Other areas?**
- **What is my capacity to provide an AFP/MFP service?**
- **What machinery and equipment do I need to start up and run an AFP/MFP service?**
- **How can I afford to buy an AFP/MFP?**

- **What profits will I get from my future AFP/MFP business service?**
- **How can I get as many farmer-clients as possible to pay for use of the AFP/MFP, so I can maximise my profits?**
- **Would it help to combine the use of the AFP/MFP with other machinery services, for example bed planting or the PTOS? What about self-propelled multi-crop reapers?**

Service provider experience sharing

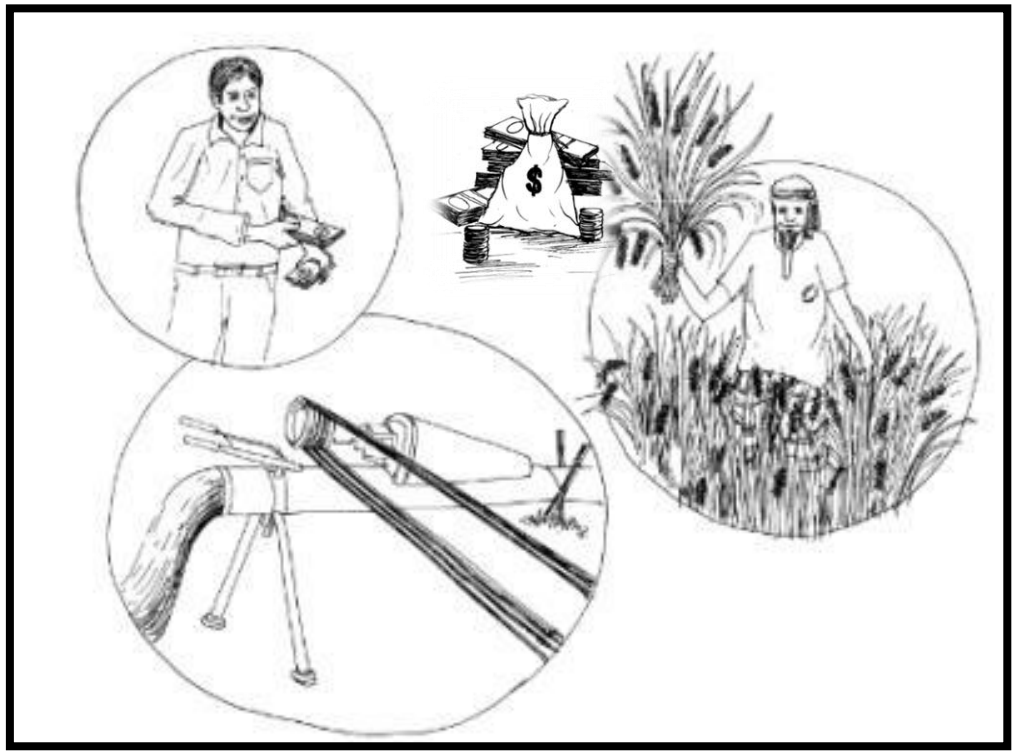

Do you know a successful service provider who uses an AFP or MFP? Ask them some questions!

- **Why did they start an AFP/MFP business?**

- **How did they start up their business?**
- **What are the costs and benefits of an AFP business?**
- **How long did it take them to break even (make profit equal to the cost of an AFP/MFP) on the cost of buying an AFP/MFP, or when do they expect to break even?**

- **What activities make their AFP/MFP business profitable? What makes it not profitable, and what would they advise avoiding?**
- **Do they face any challenges in using the AFP/MFP?**
- **What benefits are their farmers (clients) getting from the AFP/MFP business?**

Questions to ask before becoming an AFP/MFP service provider (group exercise)

Where do I get the money to buy a AFP/MFP?

Where can I buy a AFP/MFP?

How can I improve my skills as a AFP/MFP service provider?

Where can I get spare parts for my AFP/MFP and get it repaired?

Service provider

How can I offer AFP/MFP services profitably to farmers?

How can I and my farmer-clients profit at the same time? How can I attract farmer-clients?

Where do I start my business? What is the demand for AFP/MFP service there? What about elsewhere?

What activities/strategies should I follow to expand the business?

How do I offer services to farmers and still make a regular profit?

To attract farmer-clients to your AFP/MFP business, it is important to advertise the benefits of the AFP/MFP to farmers in your own and nearby villages

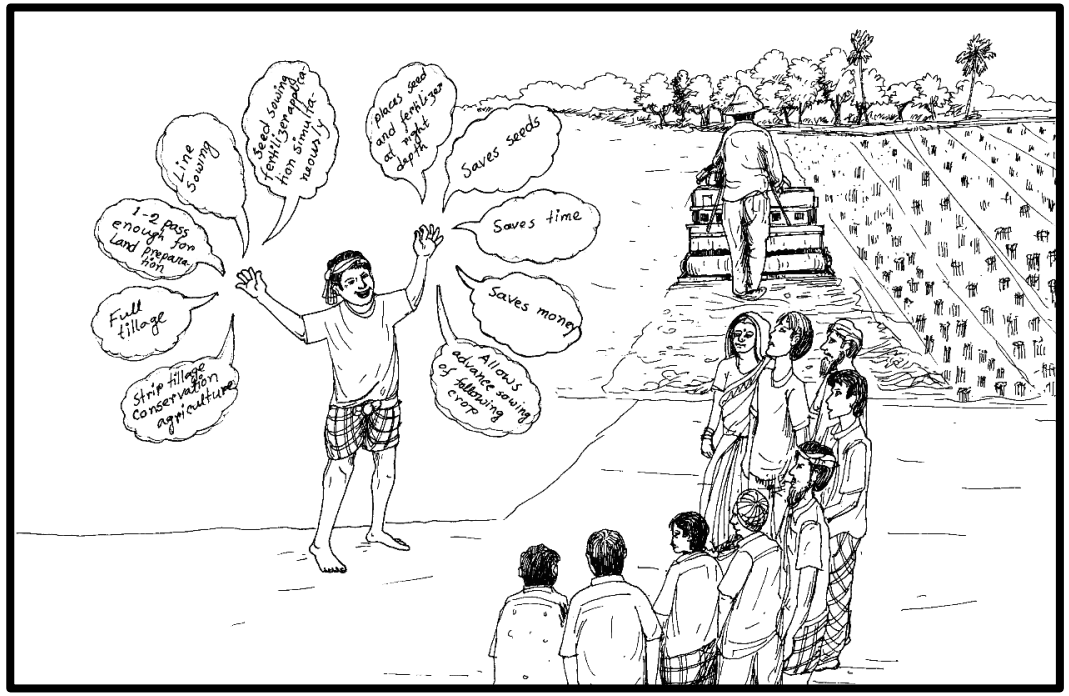

Remember the benefits of an AFP/MFP?

- **For low lifting (up a height of less than 3 m), fuel consumption of AFP is significantly (21 – 50%) lower than with a traditional centrifugal pump, saving money for irrigation service providers**
- **These fuel savings mean that it is possible to lower irrigation and water pumping prices for farmers – so they benefit too.**
- **More farmers can be served to make even more money.**

AFP or MFP Cost-Benefit Analysis (group exercise)

Centrifugal Pump

A. Irrigation cost for maize:
Area =
Oil-fuel cost =
Canal making cost in fields=

Total=

Axial or mixed flow pump

B – Capital cost AFP/MFP cost = Cost of an engine (new buyers only) =

C – Maize Oil-fuel cost =

Cost of canal-making (labour) =

D – Maize (Opportunity cost of service provider's labor) =

E – Maize AFP/MFP service charge to farmer for irrigation
=
=

F – Service provider's profit (maize) = $E - (C + D) =$

G – Farmer's savings (maize) = $(A - E) =$

H – Irrigation cost for dry season *boro* rice:
Area =
Oil-fuel cost =
Canal making cost in fields=

Total=

I – *Boro* rice Oil-fuel cost =

Cost of canal-making (labour) =

J – *Boro* rice (Opportunity cost of service provider's labour) =

K – *Boro* rice AFP/MFP service charge to farmer for irrigation
=

L – Service provider's profit (dry season *boro* rice) $K - (I + J) =$

M – Farmer's savings (dry season *boro* rice) =
$(M - K) =$

Axial and mixed flow pumps (Service Providers)

One-day training

N – Irrigation cost for other crops:

Area =

Oil-fuel cost =

Canal making cost in fields=

Total=

O – Other crops
Oil-fuel cost =

Cost for canal-making (labour) =

P – Other crops (opportunity cost of service provider's labour) =

Q – Other crops
AFP/MFP service charge to farmer for irrigation =

R – Service provider's profit (Other crops) $Q - (O + P)$=

S – Farmer's savings (Other crops) = $(N - Q) =$

W – To break even:

Time (year) required

$$= \frac{\boldsymbol{B}}{(\boldsymbol{AG} + \boldsymbol{AH} + \boldsymbol{AI})}$$

T – Area you can irrigate in 1 day
Maize (AA) =
Boro rice (AB) =
Other crops (AC) =

U – No. of days you can irrigate in 1 year
Maize (AD) =
Boro rice (AE) =
Other crops (AF) =

X - 1 *bigha* = 0.33 *decimal*/acre = 0.134 hectare

V – Service provider's yearly profit

Maize: $AG = [AA \times AD \times (E - C + D)]$
Dry season rice: $AH = [AB \times AE \times (K - (I + J)]$
Other crop: $AI = [AC \times AF \times (Q - (O + P)]$

The importance of financial record keeping

Keep careful records of how much you spend and profit as an AFP/MFP service provider is important for working out how long it takes to break even, and to figure out ways to profit more.

Here are some examples you can use:

A) Primary investment

Item	Date	Quantity/No.	Unit price	Own money	Credit
1. Diesel engine/2-WT					
2. Machine: (AFP/MFP)					
3. Transportation					
4. Others					
Total investment =					

B) Example information for monthly income-expenditure

Month: (for example, March 2015)

Date	Expenditure (for operating the machine)				Income (as service charge)			
	Item	Quantity/no.	Money paid (in BDT)	Money unpaid (in BDT)	Farmer	Area & crop	Money paid (in BDT)	Money unpaid (in BDT)
10/3/2015	Petrol/diesel	10 liters	400	200	Malek Sarder	0.25 ha (*boro*)	800	400
	Mobil/grease	500 ml	100		Ramij Sikder	0.45 ha (*boro*)	1000	1000
	Spare parts	2	60		Mafiz Sikder	0.25 ha (*boro*)	1200	-
	Transportation		50		Shakur Mia	0.4 ha (*boro*)	1600	-
	Labour	1	300					
	Others							
11/3/2015								
31/3/2015								
Total expenditure =					Total income =			

Review of key messages

After learning about AFP and MFP business plans, can you answer the following questions?

- **Where is the market for an irrigation service business?**
- **What is the market demand for an irrigation service?**

- **What is my capacity to provide an irrigation service?**
- **What are my machinery and equipment needs to start an AFP/MFP business?**
- **What does it mean to 'break even' on an investment?**

- **What profit can I hope to get from my proposed AFP/MFP business?**
- **What crops are likely to be the most profitable to irrigate with an AFP/MFP – or is it best to service farmers with fish or shrimp ponds?**
- **How much time do I need to break even?**

Review of key messages, post-training evaluation and close of training

Session 7

Cereal Systems Initiative for South Asia

Funded by

USAID FROM THE AMERICAN PEOPLE

BILL & MELINDA GATES foundation

Partners

CIMMYT International Maize and Wheat Improvement Center

IFPRI

IRRI

- **What are the significant differences between the axial flow pump, mixed flow pump and centrifugal pump?**
- **What are the advantages of an axial or mixed flow pump over a traditional centrifugal pump**
- **In which environments (in terms of saline or non-saline water) and at what water lift heights can the axial or mixed flow pump be used profitably?**

- **What are the major functional parts of an AFP/MFP?**
- **What are the important considerations for starting and safe operation of an AFP/MFP?**
- **What are the major causes of failure or breakdown of the AFP/MFP? What are their solutions?**
- **What do we mean by a 'business'?**

- **How long does it take to break even after buying an AFP/MFP and starting a business providing irrigation services to farmers?**
- **How can you make an AFP/MFP service profitable, while benefiting farmers at the same time?**
- **Why is financial record-keeping important?**